PV Waterheating System 200L

Low Irradiation areas
Product Code: 200L
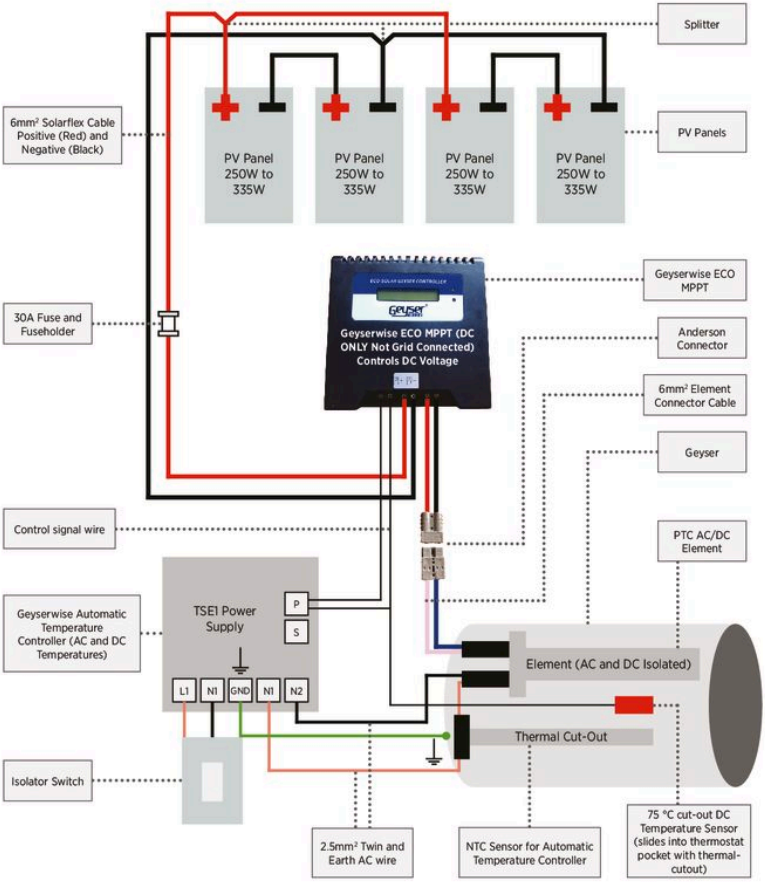
INSTALLATION INSTRUCTIONS